# 6’ V-Throw Full Dyesub

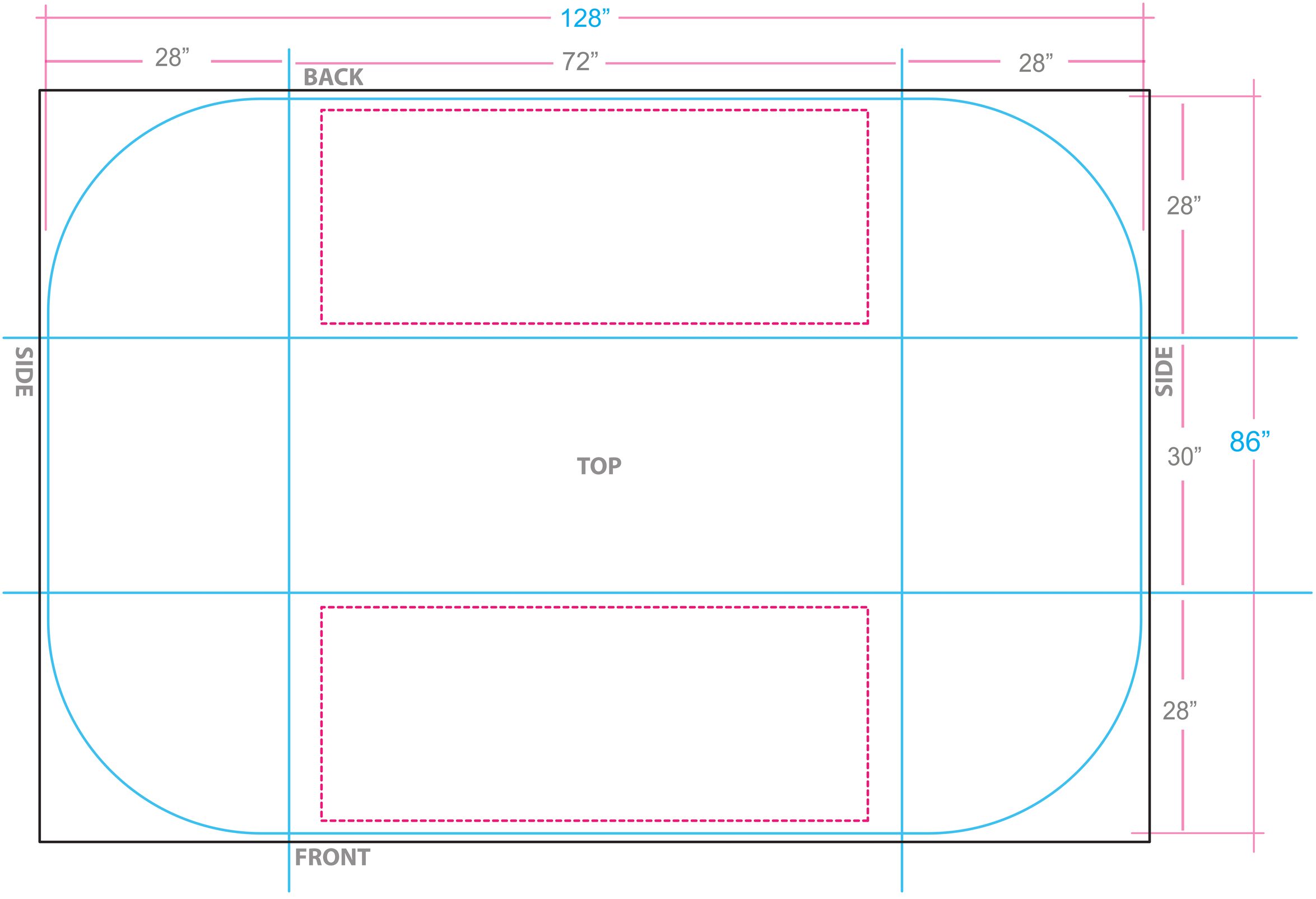


Prairie
DISPLAY / CHICAGO, INC.
www.prairiedisplay.com
630.834.8773

Print Size: 130”w x 88”h

Final Size: 128”w x 86”h

Logo Live Area: 64”w x 25”h (front and back)